marco
cablemanagement

PRODUCTS DESIGNED FOR

HEALTHCARE

Hospitals, Clinics & Medical Centres

A PART OF atkore INTERNATIONAL

British made,
Innovation led

Introduction

Established in 2003, the Anglesey-based firm has honed a strong reputation within the electrical contracting and wholesale sectors as a supplier of high quality, durable and aesthetically-pleasing products that are both adaptable and versatile.

Through the years, the firm has invested continuously in its core product ranges and is now able to offer a one-stop cable management solution made up of various specifications and accessories that meet the needs of almost any contract.

Marco has remained committed to its customer-first ethos and upholds its founding values. Same day delivery is guaranteed, whilst bespoke specifications are welcomed and a highly experienced and knowledgeable team are always on hand to support customers with any queries.

In a sector dominated by European and Asian competitors, working with a UK business offers that all-important contact and communication where relationships are built and a bond is forged. That's why Marco has grown to become the number one supplier in its field and continues to strengthen its presence both within the UK and further afield.

We hold ourselves to the highest standard in all that we do, the company's core values of accountability, teamwork, integrity, respect and excellence are the same values at the foundation of the company's tax strategy.

Part of the Atkore International family

Atkore is a major manufacturer and innovator with a unique focus on steel frame, pipe and electrical products. As part of the Atkore family we can draw on a variety of technologies, products and experience from Atkore companies throughout the world.

RACEWAY. YOUR WAY.™

Raceway. Your Way

Electrical raceway is the mechanical infrastructure that deploys, isolates and protects a structures electrical circuitry from source to outlet.

A PART OF atkore INTERNATIONAL

THE BRITISH ASSESSMENT BUREAU ISO9001

THE BRITISH ASSESSMENT BUREAU ISO14001

BSI

CE

Contents

Marco in Healthcare	4
Notable Projects	4
Hygieia	5
Products	6-7
Compound	8
Testing	8
Case Study - Glasgow	9
Case Study - Alder Hey	10

Marco in Healthcare

Marco is a leading supplier of cable management solutions, delivering quality products and bespoke solutions to the UK's health sector.

We are proud to be able to offer such a diverse and adaptable product range, offering solutions for both first and second fix: across various market sectors.

Our products are designed and manufactured with all users in mind, ensuring that strict specification guidelines are met, and delivering the best quality product possible.

Marco's anti-microbial products have been trusted to provide peace of mind on medical installations for over 10 years, and have been specified on a number of high profile installations all across the UK and Ireland.

All of Marco's products are designed and manufactured to meet the latest British standards including ISO 9001 and 14001.

Notable Projects

As a leading supplier to the health sector, Marco's products have been used on a number of notable projects up and down the country, including:

- South Glasgow Hospital
- Morriston Hospital - Swansea
- Dumfries Hospital
- Guy's & Thomas Hospital - London
- Aldery Hey Children's Hospital - Liverpool
- Ayrshire Hospital - Irvine
- Royal Liverpool Hospital
- Bristol Royal Infirmary
- Llandough Hospital
- Southmead Hospital - Bristol
- Dr. Gray's hospital - Elgin
- North Wales & Midland Medical Centres
- Astra Zenica Pharmaceutical Plant - Macclesfield
- Cardiff Royal Infirmary
- Morriston Hospital - Swansea
- Prince Charles Hospital - Merthyr Tydfil

Anti-Microbial

Marco's uPVC trunking systems are available with Marco's built in Hygieia protection:

Marco's Hygieia is a built in protective element, which is incorporated into the uPVC compound during manufacture.
The Hygieia compound utilises a silver ion technology, providing anti-microbial protection throughout, creating a defence against 99.9% of harmful bacteria growth.

This protects against and prevents the growth of, bacteria, fungi, mildew and moulds, including:

- MRSA
- E-Coli
- Klebsiella Pneumoniae
- Streptococci

Due to the Hygieia element being incorporated into the PVC during manufacture, and therefore an integral part of the trunking, Marco can ensure there is no degradation of performance during use, even if the trunking becomes scratched or damaged, even years after initial installation.

All Hygieia products are tested in accordance with ISO22196:2007, which specifies the method of evaluating the antibacterial activity of treated plastic products and is in compliance with all relevant European regulations.

All Marco products supplied with Hygieia protection are packaged in a blue protective film, to protect and differentiate it from standard uPVC products.

Full details of the tests are available on request.

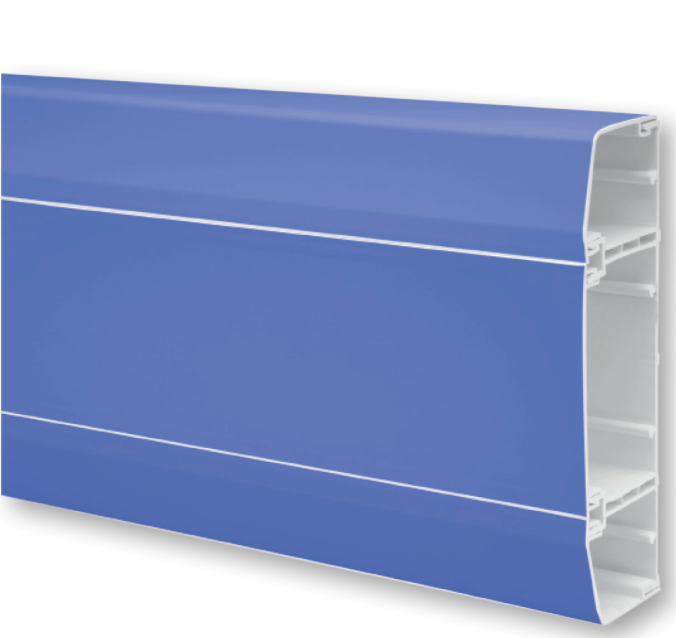

Marco Apollo 3

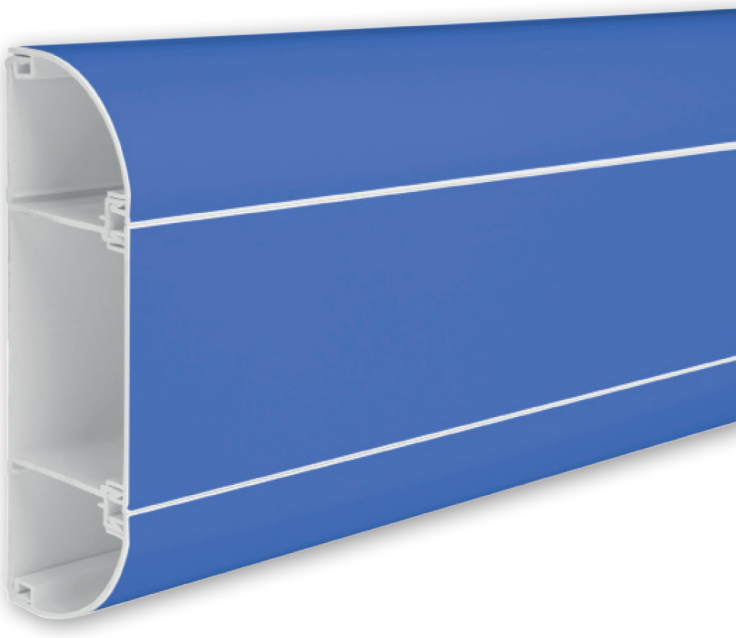

Marco Elite 3

Blue film for illustration only, must be removed after installation

Products

Elite 3 - Hygieia

175 x 60mm

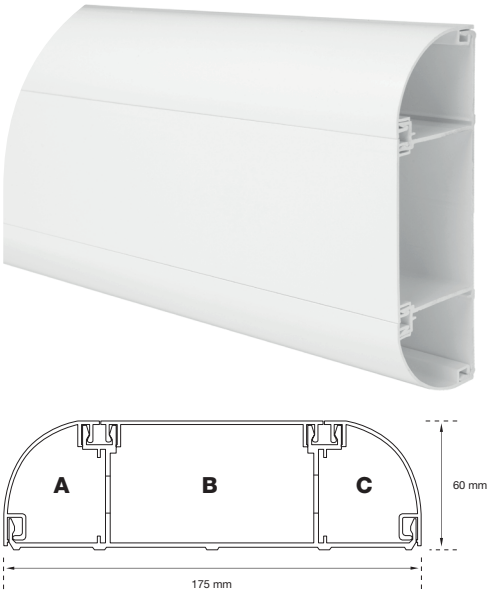

Marco's flagship trunking system, designed to suit all installation environments. Elite 3 is manufactured from the highest quality uPVC compound providing its signature pure white finish.
At 175 x 60mm Elite 3 is able to accommodate CAT5E, CAT6, CAT6A and CAT7 cabling, making it perfect for any modern installation.

Elite 3 is also available with a light grey or charcoal centre lid.

CODE	DESCRIPTION	LENGTH	PACK QTY
ME3AM	Elite 3 - Pure White with Anti-Microbial	3m	2 x 3m
ME3AMLGL	Elite 3 - Light Grey Lid with Anti-Microbial	3m	2 x 3m
ME3AMCHL	Elite 3 - Charcoal Lid with Anti-Microbial	3m	2 x 3m

Elite Compact - Hygieia

145 x 50mm

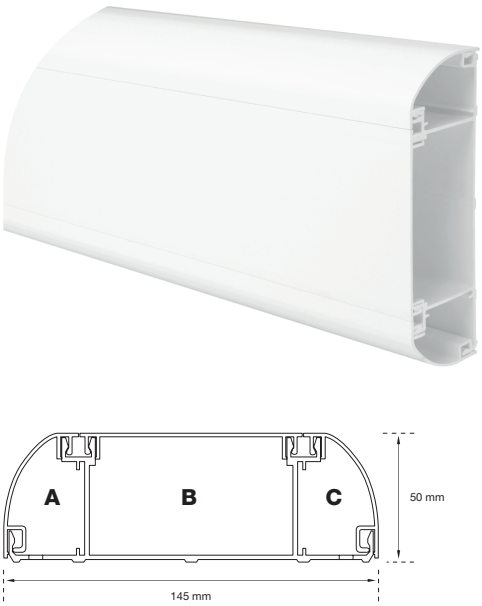

Marco's Elite Compact offers all the benefits of the larger Elite products, packed into a 145 x 50mm profile.
Manufactured from the same high quality uPVC compound, Elite Compact has the same signature pure white finish as Marco's other trunking systems.
Elite Compacts design makes it perfect for housing structured cabling and comes CAT5E, CAT6, CAT6A & CAT7 compliant as standard.

CODE	DESCRIPTION	LENGTH	PACK QTY
MEC3AM	Elite Compact - Pure White with Anti-Microbial	3m	2 x 3m
MEC3AMLGL	Elite 3 Compact - Light Grey Lid with Anti-Microbial	3m	2 x 3m
MEC3AMCHL	Elite 3 Compact - Charcoal Lid with Anti-Microbial	3m	2 x 3m

Juno - Hygieia

175 x 60mm

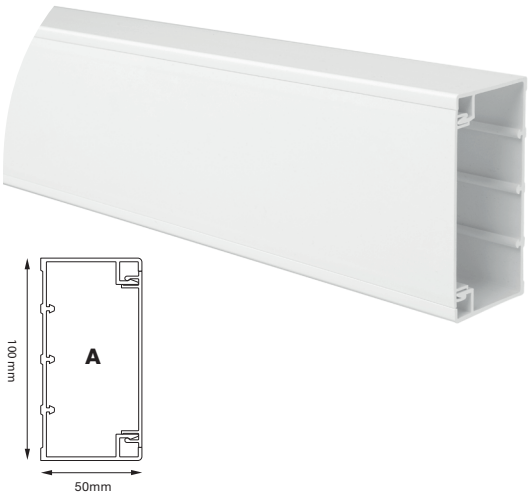

Juno trunking is a single compartment system with the ability to be sub-divided up to three times, creating up to four compartments.

Juno is ideal for smaller installations where cable segregation is a must.
It's compact design makes it perfect for domestic and commercial use, and has seen use in projects with repeating specifications.

CODE	DESCRIPTION	LENGTH	PACK QTY
MT105AM	Juno - Pure White with Anti-Microbial	3m	2 x 3m
MT105AMLGL	Juno - Light Grey with Anti-Microbial	3m	2 x 3m
MT105AMCHL	Juno - Charcoal with Anti-Microbial	3m	2 x 3m

Apollo 3 - Hygieia

170 x 50mm

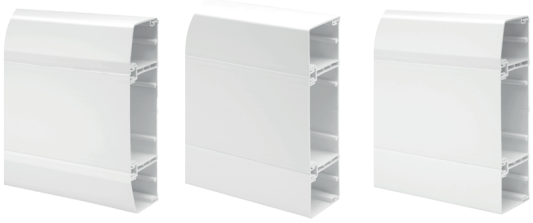

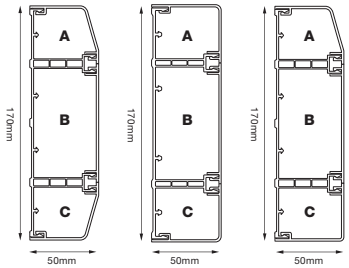

Marco's Apollo trunking is available in three different profiles to suit multiple installation environments.

Available as dado, skirting or square profiles, Apollo's interchangeable lids are designed to accommodate any installation's requirements, whilst retaining an aesthetically pleasing design.

Apollo is also available as a 4 compartment option.

CODE	DESCRIPTION	LENGTH	PACK QTY
MTD3AM	Apollo 3 - Dado Profile - Anti-Microbial Finish	3m	2 x 3m
MTDQ3AM	Apollo 3 - Square Profile - Anti-Microbial Finish	3m	2 x 3m
MTS3AM	Apollo 3 - Skirting Profile - Anti-Microbial Finish	3m	2 x 3m

Compound

Marco utilise a specialist compound in our Anti-Microbial products which is both RoHS and WEEE Compliant.

Marco utilise a calcium/zinc stabilised, high impact, satin finish extrusion compound, which has an anti-microbial silver ion additive, which is included to help reduce Escherichia coli and Methicillin resistant staphylococcus (MRSA).

Typical test results for the trunking are as follows:

Property	Test Method	Units	Value
Specific Gravity	BS2782 620A	g/cc	1.50
Vicat softening point	BS2782 (B50) 1990 120B	C	78
Tensile strength @ yield	BS2782 320A-F	MPa	40

Testing

Quantitative Assessment of Activity - ISO22196:2007 - MRSA

Concentration of starting inoculum : 3.20 x 105 CFU/mL

Sample Descrpition	Number of Bacteria Recovered	Log Value	R =[log(B/C)]	% Survival
White PVC - untreated control	$4.57x10^{6}$	6.7		
White Rigid PVC - Treated with Ag ion additive	$<5.00x10^{1}$	<1.7	>5.0	<0.1

Quantitative Assessment of Activity - ISO22196:2007 - Klebsiella Pneumonia

Concentration of starting inoculum : 2.36 x 105 CFU/mL

Sample Descrpition	Number of Bacteria Recovered	Log Value	R =[log(B/C)]	% Survival
White PVC - untreated control	$1.76x10^{6}$	6.3		
White Rigid PVC - Treated with Ag ion additive	$<5.00x10^{1}$	<1.7	<4.4	<0.1

CFU = Colony Forming Units
Test Results: Thomson Research Associates Inc, Ontario, Canada
Test Organism: MRSA (Methicillin Resistant Staphylococcus Aureus) / Klebsiella Pneumonia

Case Study - Glasgow

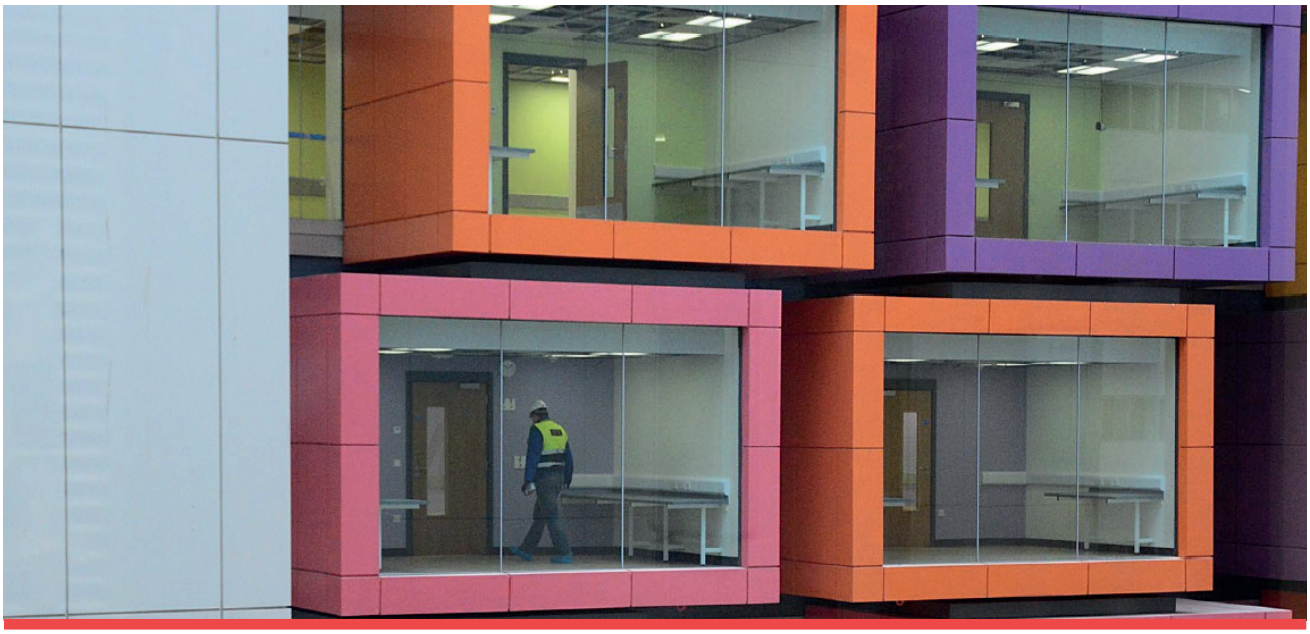

Project: Glasgow General Hospital
Client: Mercury Engineering
Products: Elite 3 Hygieia

Marco, a leading uPVC Cable Management Company, and the UK's largest manufacturer of Steel Wire Cable Tray, has made its final delivery to contractors on site at Glasgow General, the largest single NHS hospital ever built in Scotland.

Mercury Engineering managed the entire construction programme at the hospital, one of the most advanced medical facilities in the world, which includes a 14 storey adult hospital and a 5 storey children's hospital. The facility also has 20 modern operating theatres and is home to major specialised services for renal medicine, transplantation and vascular surgery.

Mercury Engineering managed the entire construction programme at the hospital, one of the most advanced medical facilities in the world, which includes a 14 storey adult hospital and a 5 storey children's hospital. The facility also has 20 modern operating theatres and is home to major specialised services for renal medicine, transplantation and vascular surgery.

Gavin Hanlon, Electrical Manager at Mercury Engineering said: "Mercury learned about the Hygieia product from previous Marco case studies and their success on other large healthcare projects.

The Hygieia specification is a perfect fit in environments where the spread of bacterial growth must be controlled, which was a key factor to Mercury when considering the hygiene requirements of a modern day hospital.

Mercury is very happy with the products that Marco supply. Not only are the products of good quality, but Marco themselves as an organisation are very good with communication and delivery of products."

Marco utilises silver ion technology within its Hygieia specification to create a defence against 99.9% of harmful bacteria growth. This provides built-in protection from, and prevents the growth of, bacteria including MRSA, E-Coli, Salmonella, Klebsiella Pneumoniae and Streptococci; along with fungi, mildew and mould.

The antimicrobial compound is incorporated into the uPVC, and is therefore an integral part of the Trunking. Therefore, there is no degradation of performance if the surface becomes scratched or damaged.

All antimicrobial products are tested in accordance with ISO22196:2007, which specifies the method of evaluating the antibacterial activity of treated uPVC products and is in compliance with all relevant European regulations.

Case Study - Alder Hey

Project: Alder Hey Children's Health Park
Client: Crown House
Products: Elite 3 Hygieia & Steel Wire Cable Tray

Marco has sealed one of its largest orders to date, with contractors on site at the new Alder Hey Children's hospital in Liverpool.

The £237m hospital, which will be known as Alder Hey Children's Health Park, is expected to open its doors this year and will provide state of the art care and support for children from across the North West, as well as the rest of the country, setting the standard for child healthcare in the UK.

Contractor Crown House has managed the complex installation programme specifying several thousand lengths of Marco products for use across the vast facility.

Kate Knox Area Sales Manager at Marco Cable Management said: "It's great to see such a large order at a project of this nature, marking one of our largest orders to date. The new Alder Hey scheme is an incredibly important facility for children not just in Merseyside but across the UK. We're all proud to be part of this fantastic scheme that sets a new standard on many levels."

Alder Hey Children's NHS Foundation Trust provides care for over 275,000 children and young people every year. Each year, approximately 60,000 children visit its A&E department (the busiest of its kind in the country) which over 30,000 attend as outpatients.

The project is being built by a consortium comprising John Laing, Laing O'Rourke and Interserve and is set to be completed later this year.

Contractor Laing O'Rourke Construction North Ltd won a Gold Award for the project at the Considerate Constructors Scheme's 2015 National Site Awards.

marco
cablemanagement

Marco Cable Management
Unit 8
Bryn Cefni Industrial Park
Llangefni
LL77 7XA
Wales

Phone / +44 (0) 1248 725 772
Fax / +44 (0) 1248 725 788

www.marcocm.com

RACEWAY. YOUR WAY.™

A PART OF atkore INTERNATIONAL